The Inverted-U Yagi on 20 Meters
And an Alternative

L. B. Cebik, W4RNL (SK)

In the last episode, we examined the conversion of a 10-meter-based dipole inverted-U antenna into a 2-element Yagi. Although the dipole proved highly useful from 10 through 20 meters, the Yagi showed some limitations. Below 15 meters, the boom length became excessively long to call the antenna compact. The 20-meter tips grew to 127" (10.6') each. As well, 20-meter performance lost a full dB of gain and of front-to-back ratio, not to mention almost all of the front-to-side nulls. Nevertheless, the 15-meter performance remained high enough and the size small enough to make a viable 2-element Yagi.

The search for a compact 20-meter beam might not include the 10-meter-based inverted-U. However, a 15-meter 2-element Yagi might form the basis for an inverted-U 20-meter antenna. In theory, at least, the 15-meter performance of the 10-meter-based inverted-U should transfer to 20 meters if we use a 15-meter Yagi as the baseline. In this exercise, we shall explore this possibility. Our goal will not only be to see what potentials and limitations accompany the design. We shall additionally call attention to a certain tunnel vision that sets in when we pursue an idea to its limits. We tend to concentrate so hard on making the original idea work that we overlook other possibilities that might offer more satisfactory routes to the same goal. In this case, our goal is a compact 20-meter 2-element beam with adequate performance. As we shall see, there are alternatives to the inverted-U Yagi.

In the process of evaluating the use of a 15-meter 2-element Yagi as the foundation for a 20-meter inverted-U Yagi, we shall also alter our construction. The 10-meter versions of the antenna used very light materials suited only for short-term field conditions. The element taper schedule was not suitable to handle high wind loads, and the hitch-pin fasteners require replacement with more durable electrical and mechanical connectors. Since we shall move to a larger base-line beam, we shall employ element-diameter taper schedules more suited to long-term installations.

The ARRL Antenna Book has long had a very good section on Yagis and Yagi construction. The catalog of models that accompanies the book is contained in the program YW (the Windows version of the older DOS YA). The sample beams use taper schedules designed for medium duty (about 80 mph) wind loads and heavy duty (about 100 mph) wind loads. For the design exercises, I have adapted these element-diameter taper schedules for the 15-meter beams to the present effort. I shall assume that any implementation of the design will use adequate element overlap and secure fasteners in the final assembly.

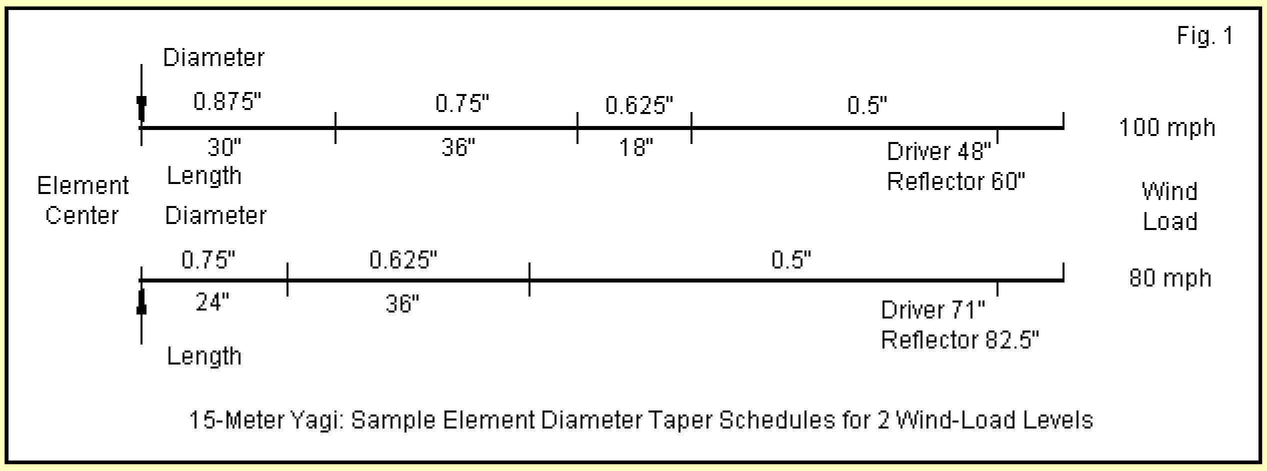

15-Meter Yagi: Sample Element Diameter Taper Schedules for 2 Wind-Load Levels

Fig. 1 shows the two taper schedules in terms of each element half. Both versions of the element structure include two tip lengths: one for the driver and one for the reflector. Remember to add about 3" for element section overlap. At the center, you may extended the second section all the way to the center to increase strength near the boom. In addition to the increased element strength, the new beams also use AWG #12 wire for the vertical tips. To avoid bi-metallic electrolysis, use aluminum wire for the tips (and stainless steel hardware throughout the beam).

As we did with the 10-meter-based inverted-U Yagis, let's move band-by-band from 15 to 20 meters. The exercise will let us review the performance evolution and the requirements to reach the performance goals. As in the initial exercise, we shall design 2-element Yagis with drivers and reflectors. As well, the Yagis will display a 50-Ohm feedpoint impedance so that we can directly connect the coax cable (through a common-mode current suppressing choke) to the antenna.

15 Meters: The baseline 15-meter 2-element Yagi uses standard design techniques to arrive at a driver-reflector array with usable performance and a 50-Ohm feedpoint impedance. As the following table reveals, the element taper does affect the require element lengths for essentially the same performance levels. Note that the thinner elements of the medium-duty version result in slightly shorter elements, which is contrary to our intuitions that derive from examining uniform-diameter elements. However, the heavy-duty version has an extra diameter step, resulting in a more severe total element taper. This factor--along with the exact positions of the section steps--controls the resulting equivalent uniform-diameter element and the required element length. Although the element lengths differ slightly between the 2 element-diameter taper schedules, the element spacing is the same for both antennas. All designs in this exercise emerged from NEC-4 models.

Inverted-U Yagi 15-Meter Performance
No vertical end wires required
Heavy-duty version: Driver Length: 264" Reflector Length: 288" Element Spacing: 92"

Frequency MHz	**Free-Space Gain dBi**	**Front-Back Ratio dB**	**Feedpoint Impedance R +/- jX Ohms**	**50-Ohm SWR**
21.0	**6.36**	**10.50**	**44.2 - j 9.5**	**1.27**
21.225	**6.13**	**10.71**	**50.0 + j 1.3**	**1.03**
21.45	**5.91**	**10.47**	**55.4 + j11.5**	**1.27**

Medium-duty version: Driver Length: 262" Reflector Length: 284" Element Spacing: 92"

Frequency MHz	**Free-Space Gain dBi**	**Front-Back Ratio dB**	**Feedpoint Impedance R +/- jX Ohms**	**50-Ohm SWR**
21.0	**6.35**	**10.55**	**44.4 - j 9.9**	**1.27**
21.225	**6.10**	**10.72**	**50.3 + j 1.2**	**1.03**
21.45	**5.88**	**10.44**	**55.7 + j11.7**	**1.28**

The free-space E-plane (azimuth) patterns for the 15-meter beam appear in **Fig. 2**. I show only the heavy-duty version patterns because there is insufficient difference in the patterns of the two versions to warrant 2 sets of plots. Nevertheless, we can note that the 15-meter beam that uses no vertical tip sections displays the same clean patterns with very deep side nulls that we saw in the patterns for the 10-meter baseline beam in the preceding episode. In short, the antenna is a perfectly normal 2-element Yagi.

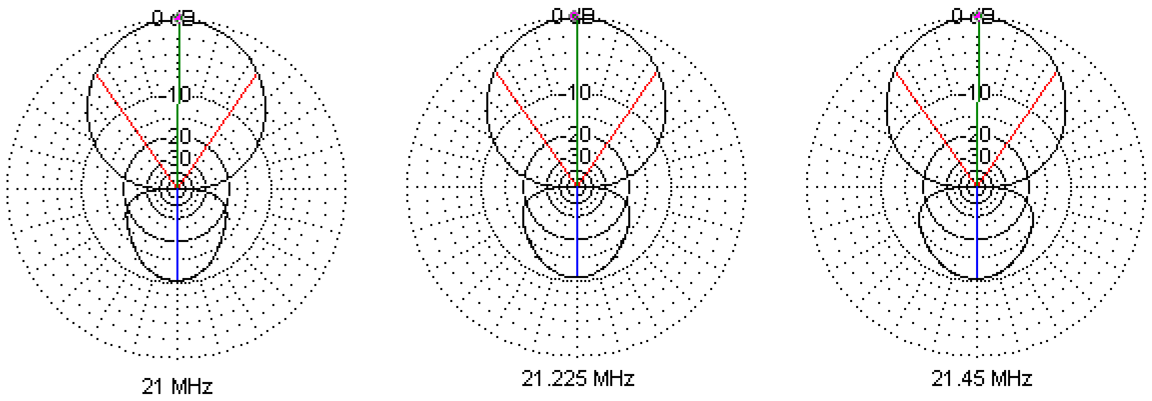

21 MHz 21.225 MHz 21.45 MHz

Inverted-U Yagi: 15-Meter Free-Space E-Plane Patterns

Fig. 2

The 50-Ohm Yagi designs gives up very small amounts of gain and front-to-back ratio to arrive not only at a 50-Ohm feedpoint impedance, but also a large bandwidth. The 50-Ohm SWR curve, shown in **Fig. 3**, never rises to 1.3:1 across the 15-meter amateur band for either version of the array.

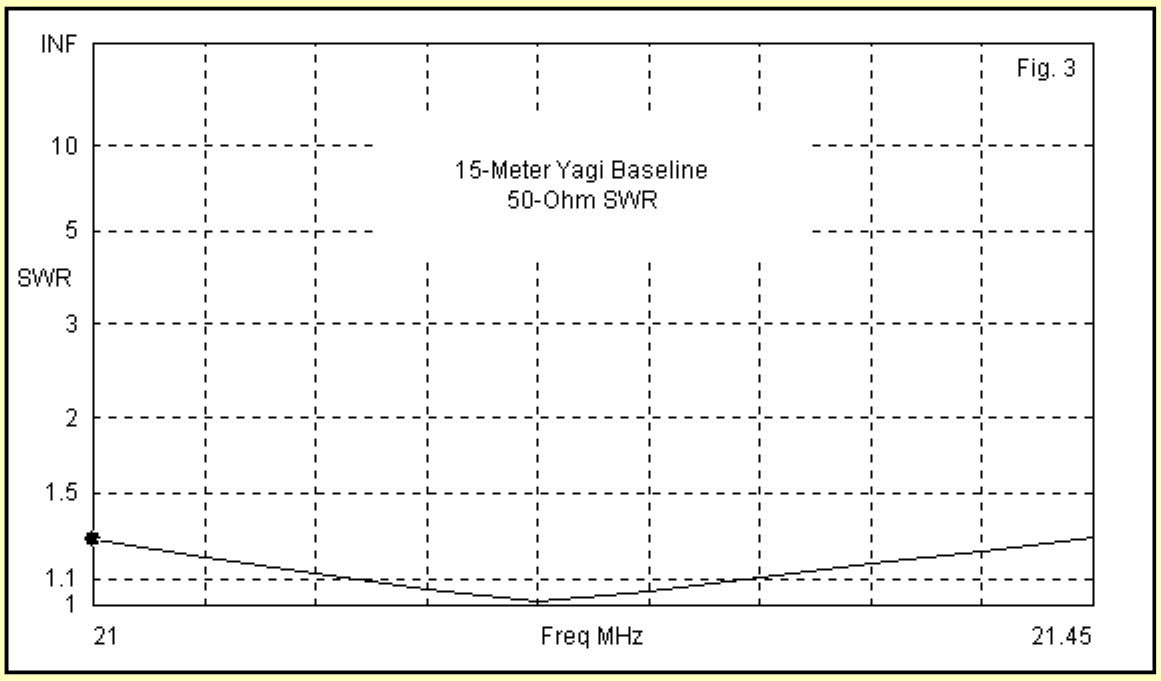

Fig. 3

17 Meters: On 17 meters, we have the same choices that we had with the 10-meter Yagi when U'ed to 12 meters. We can use the initial (15-meter) spacing (92" or 0.14 wavelength on 17) or a more optimal 112" (0.17 wavelength). When we combine this choice with the heavy- and medium-duty element-diameter taper schedules, we end up with a 4-part table for a very small band. As expected, the more closely spaced version of either construction style shows more gain and a higher front-to-back ratio, although the difference is operationally marginal. Note that, for both levels of construction, the closely spaced and the optimally spaced versions of the array require slightly different tip-wire lengths.

Inverted-U Yagi 17-Meter Performance
Heavy-duty version: Driver Length: 264" Reflector Length: 288" Element Spacing: 92"
Close spaced version: AWG #12 Vertical End Wires: 35"

Frequency MHz	**Free-Space Gain dBi**	**Front-Back Ratio dB**	**Feedpoint Impedance R +/- jX Ohms**	**50-Ohm SWR**
18.068	**6.38**	**10.95**	**36.1 - j 2.8**	**1.39**
18.118	**6.30**	**11.03**	**37.6 + j 0.4**	**1.33**
18.168	**6.23**	**11.06**	**39.1 + j 3.5**	**1.29**

Heavy-duty version: Driver Length: 264" Reflector Length: 288" Element Spacing: 112"
Optimally spaced version: AWG #12 Vertical End Wires: 34.5"

Frequency MHz	**Free-Space Gain dBi**	**Front-Back Ratio dB**	**Feedpoint Impedance R +/- jX Ohms**	**50-Ohm SWR**
18.068	**6.28**	**10.54**	**46.3 - j 2.8**	**1.10**
18.118	**6.21**	**10.64**	**47.9 + j 0.1**	**1.04**
18.168	**6.15**	**10.71**	**49.5 + j 2.9**	**1.06**

Medium-duty version: Driver Length: 262" Reflector Length: 284" Element Spacing: 92"
Close spaced version: AWG #12 Vertical End Wires: 35"

Frequency MHz	**Free-Space Gain dBi**	**Front-Back Ratio dB**	**Feedpoint Impedance R +/- jX Ohms**	**50-Ohm SWR**
18.068	**6.31**	**11.08**	**37.1 - j 0.4**	**1.35**
18.118	**6.23**	**11.12**	**38.7 + j 2.8**	**1.30**
18.168	**6.16**	**11.10**	**40.2 + j 6.0**	**1.29**

Medium-duty version: Driver Length: 262" Reflector Length: 284" Element Spacing: 112"
Optimally spaced version: AWG #12 Vertical End Wires: 34.5"

Frequency MHz	**Free-Space Gain dBi**	**Front-Back Ratio dB**	**Feedpoint Impedance R +/- jX Ohms**	**50-Ohm SWR**
18.068	**6.22**	**10.65**	**47.2 - j 0.7**	**1.06**
18.118	**6.15**	**10.73**	**48.8 + j 2.2**	**1.05**
18.168	**6.08**	**10.75**	**50.3 + j 5.1**	**1.11**

Fig. 4 shows free-space band-center E-plane (azimuth) patterns for the heavy-duty version of both the closely spaced and the optimally spaced models of the inverted U Yagi. As we noted in the case of the 12-meter inverted-U Yagi based on a 10-meter baseline, the side nulls diminish in depth as we add the 3' vertical wires to the original element ends.

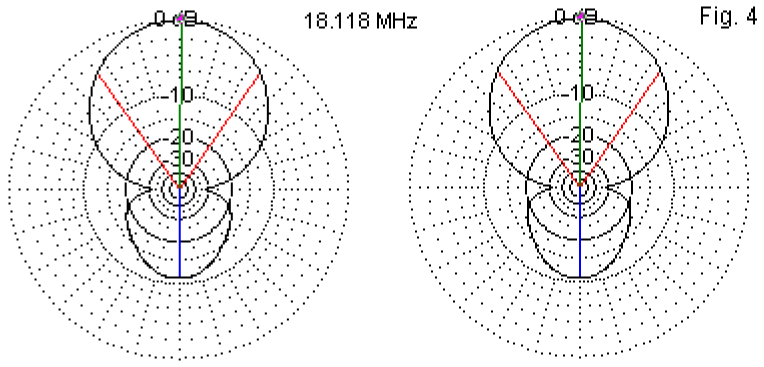

10-Meter Spacing   Optimal Spacing

Inverted-U Yagi: 17-Meter Free-Space E-Plane Patterns

Fig. 4

The 50-Ohm SWR graph overlays the plots for the heavy-duty closely spaced and optimally spaced arrays. We define optimal spacing as the driver-to-reflector distance that yields a very good match to 50-Ohm cable. Hence, it appears in the lower line. The upper line for the close spaced model still represents a highly usable direct feed system.

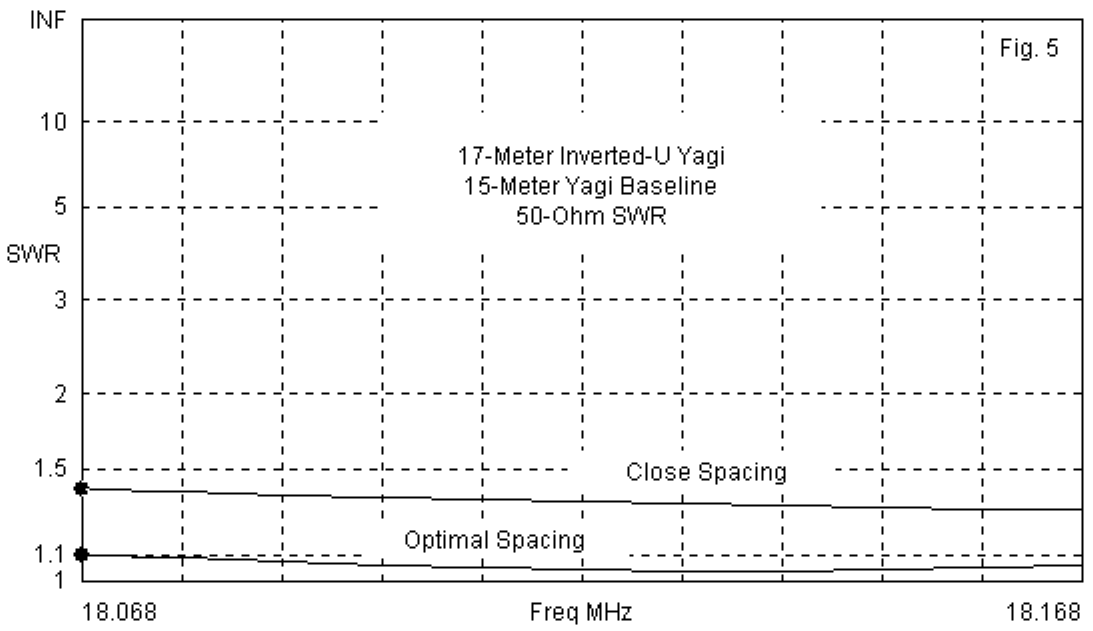

Fig. 5

20 Meters: Our ultimate goal is a reasonably compact 20-meter 2-element Yagi. By extending the tip sections to about 90", we obtain the 20-meter inverted-U Yagi using the 15-meter baseline array. The tip lengths again vary with the level of construction but are about 3' shorter than the required tip sections for the 10-meter baseline beam. As the table shows, we gain about a half-dB of gain and about a full dB of front-to-back ratio by using the 15-meter beam as the basis for the inverted-U elements. However, the element spacing must be about 160" (0.19 wavelength) to achieve a 50-Ohm feedpoint impedance.

Inverted-U Yagi 20-Meter Performance
Heavy-duty version: Driver Length: 264" Reflector Length: 288" Element Spacing: 160"
Optimally spaced version: AWG #12 Vertical End Wires: 90"

Frequency MHz	**Free-Space Gain dBi**	**Front-Back Ratio dB**	**Feedpoint Impedance R +/- jX Ohms**	**50-Ohm SWR**
14.0	**6.27**	**9.21**	**38.0 - j12.6**	**1.49**
14.175	**5.87**	**10.32**	**45.2 + j 1.1**	**1.11**
14.35	**5.50**	**10.13**	**51.4 + j13.7**	**1.31**

Medium-duty version: Driver Length: 262" Reflector Length: 284" Element Spacing: 160"
Close spaced version: AWG #12 Vertical End Wires: 89.5"

Frequency MHz	**Free-Space Gain dBi**	**Front-Back Ratio dB**	**Feedpoint Impedance R +/- jX Ohms**	**50-Ohm SWR**
14.0	**6.25**	**9.31**	**38.0 - j11.4**	**1.46**
14.175	**5.84**	**10.38**	**45.4 + j 2.5**	**1.12**
14.35	**5.45**	**10.09**	**51.5 + j15.3**	**1.35**

As shown by the patterns in **Fig. 6**, the pattern shape has degraded from distinct forward and rearward lobes into a pear-shaped affair with a very significant reduction in the side nulls. As well, the front-to-back ratio does not maintain a minimum value of 10 dB all the way across the 20-meter band. (Although the 20-meter band is only 350 kHz, compared to the 450 kHz on the 15-meter band, the 20-meter band is wider when expressed as a percentage of the band center frequency: 2.5% vs. 2.1%. Beam characteristics tend to vary as a function of the bandwidth expressed as a percentage. Hence, the 15-meter inverted-U Yagi with the 10-meter baseline obtained the requisite minimum front-to-back ratio, but the 20-meter beam based on a 15-meter array did not. The small difference in the bandwidth percentages gives us a measure of how fast the inverted-U properties tail off outside the band limits.)

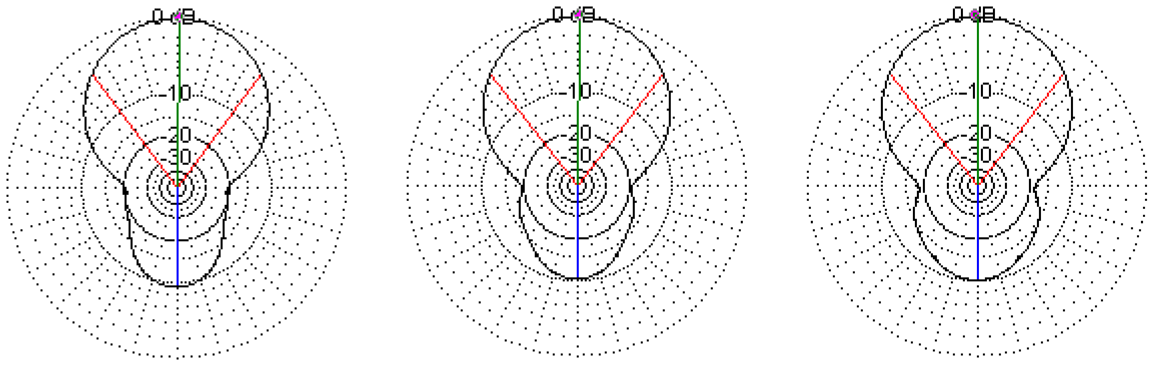

14 MHz   14.175 MHz   14.35 MHz

Inverted-U Yagi: 20-Meter Free-Space E-Plane Patterns

Fig. 6

By using a 160" spacing between the driver and reflector on 20 meters, we obtain a very good 50-Ohm SWR curve on 20 meters, as shown in **Fig. 7**. The same spacing applied to the 20-meter inverted-U version of the 10-meter baseline beam produced a curve that did not reach a minimum value of 1.5:1. Hence, the 160" spacing of the present version of the beam makes better use of the spacing.

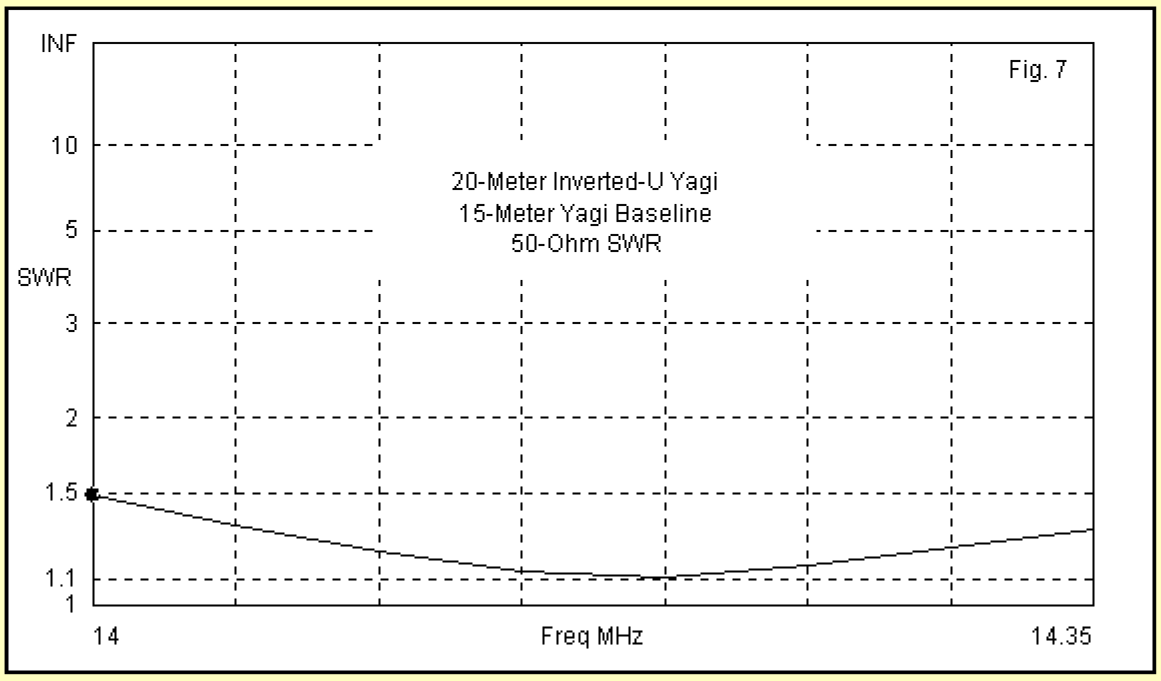
Fig. 7

20-Meter Inverted-U Yagi
15-Meter Yagi Baseline
50-Ohm SWR

In general, the 20-meter inverted-U Yagi based on a 15-meter beam provides adequate performance as a 2-element array. For a permanent installation, a designer can use closer element spacing (perhaps down to 0.125 wavelength or about 105") and accept the need for a matching network to change the lower feedpoint impedance to 50 Ohms. Nevertheless, the resulting beam will still have 3 dimensions: the listed side-to-side value for a 15-meter beam, the selected front-to-back dimension, and the vertical length of the end-wire tips. The tip wires present challenges with respect to both siting and safety. Their ends carry high voltages and must be well above a level that someone might accidentally touch. As well, they must clear any object (such as a house, barn, or garage) on which one might mount the array in a rotating configuration. Finally, for the long-term construction envisioned in this design exercise, the tips may require a periodic return to their vertical positions after long periods of bending forces by normal winds.

Thinking about Alternatives

In our efforts to arrive at a workable 20-meter inverted-U 2-element Yagi, we have allowed ourselves the luxury of tunnel vision, focusing solely on the goal of achieving the 20-meter design within the prescribed boundaries of the exercise. However, in the real world, we should never settle for a narrow view of available antenna technology until we have surveyed all of the options, including those that may appear only to well-trained peripheral vision. We have many options for a 2-element 20-meter beam, even assuming that we wish wide-band operation. For example, we might consider a full size 2-element Yagi with 35-36' elements.

If we wish to have a more compact footprint--something in the 25' range for a maximum side-to-side dimension--we have fewer choices. One alternative is the Moxon rectangle. **Fig. 8** shows a scaled comparison of the 20-meter inverted-U Yagi next to a Moxon rectangle designed for the same frequency coverage. The Moxon is only about a foot longer from side-to-side than the inverted-U Yagi, but it is about 4.5' shorter front-to-back (108" vs. 160").

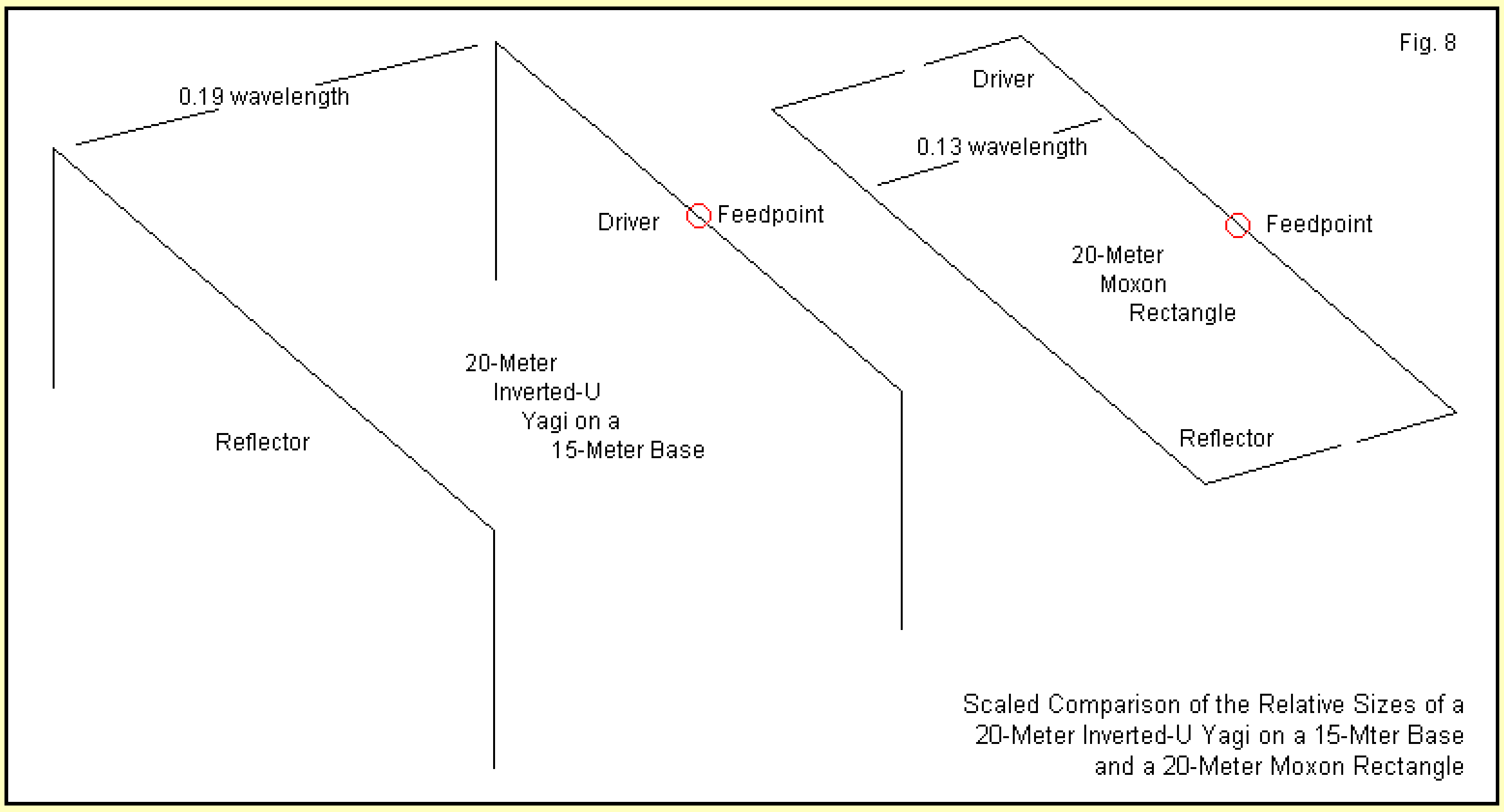
Fig. 8

Scaled Comparison of the Relative Sizes of a
20-Meter Inverted-U Yagi on a 15-Mter Base
and a 20-Meter Moxon Rectangle

I have in the past developed some algorithms for calculating the dimensions of Moxon rectangles for any frequency and for any uniform-diameter element size. Because the elements used in this model employ a stepped-diameter tubing schedule, the actual dimension vary considerably from those of a uniform-diameter model. As in the case of the Yagi, the side-to-side dimension becomes longer due to the stepped element diameter. The top portion of **Fig. 9** shows the conventional way of charting dimensions for a uniform-diameter Moxon rectangle. For comparison, I have mapped the dimensions of the present design against a uniform-diameter Moxon rectangle with 0.626" diameter elements--about the average of the tubing sizes used in the tapered design. Dimension E is to total front-to-back size, the sum of dimensions B, C, and D.

A Comparison of the Dimensions of a Tapered Element Diameter Moxon and a Uniform-Diameter Moxon

Dimension	**Tapered Model**	**Uniform Model**
A	**317"**	**301.45"**
B	**42.5"**	**42.52"**
C	**7.5"**	**11.39"**

D	**58"**	**57.27"**
E	**108"**	**111.18"**

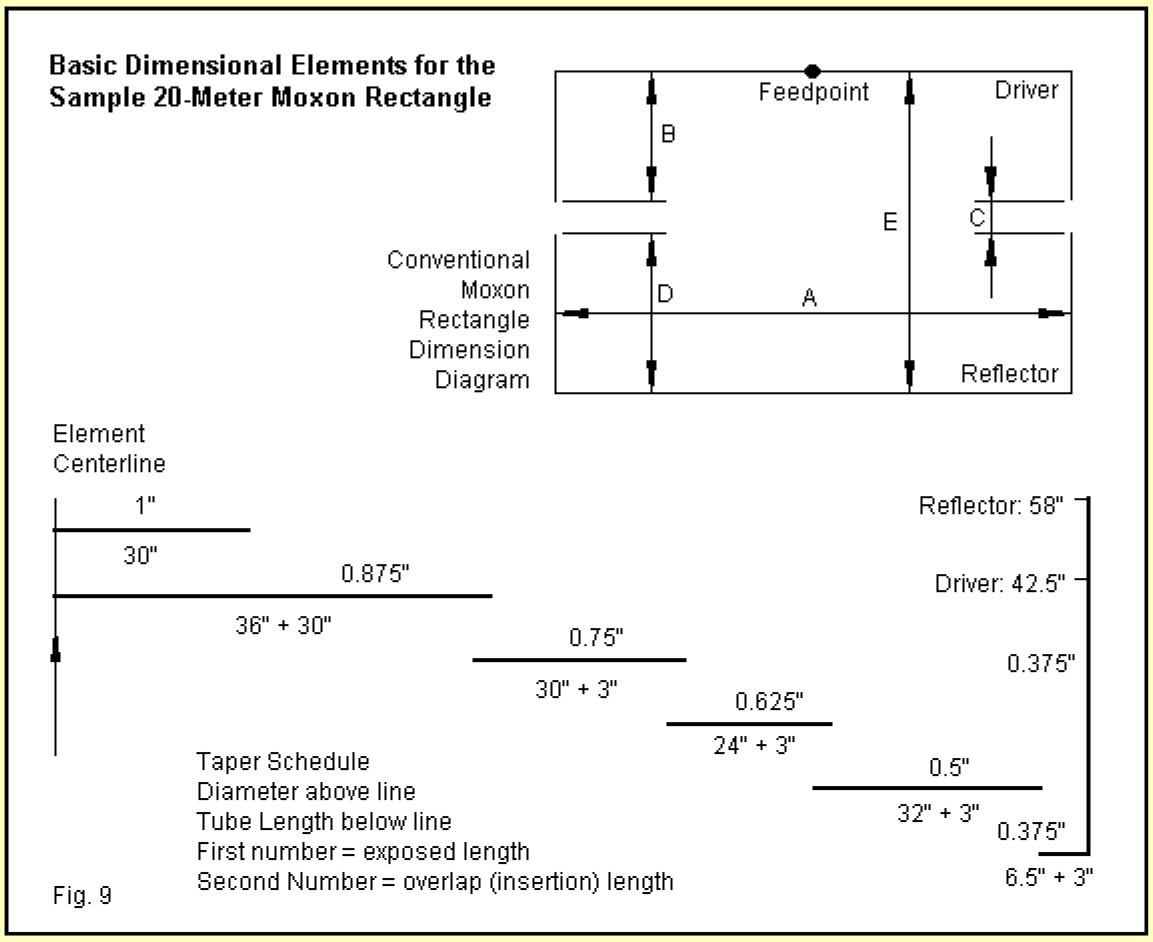

Fig. 9

The lower portion of **Fig. 9** shows the modeled element-diameter taper schedule used in the design. The half-element schedule shown applies to both sides of the element centerline. Tube diameters range from 1" at the center to 3/8" for the tips. Past the center-most section, the numbers come in two parts. The first shows the exposed length, while the second shows the insertion length. Note that the 7/8" tube extends inside the 1" tube all the way to the center. Since the element length is tip to tip, subtract a small amount from the center-most sections for the feedpoint gap. The tip sections, which fold back and point at each other, use 3/8" tubing. Before we close the investigation, we shall briefly discuss some of the construction issues that are common to both the inverted-U Yagi and the Moxon, as well as some that are unique to each type of array.

In fact, AerialActs of Silver Spring, MD (Craig Roberts, W3CRR) markets a commercially made Moxon rectangle (called the MaxiMoxon) that employs similar but not identical structures as the present model. The MaxiMoxon employs a different taper schedule than the model shown here.

The side-to-side dimension for the elements is 317", about 30" more than required by the longest 15-meter Yagi element in the inverted-U beam design. The total front-to-back dimension--including both the driver and the reflector tails and the gap between them--is 106". The 3/8" driver tail is 42.5", while the reflector tail is 58". The gap--perhaps the most critical dimension in the collection--is 7.5". In all model-based designs, the dimensions run from one element centerline to the opposing element centerline. With the given dimension, we obtain the modeled performance shown in the following table. Note that the proper design frequency for a Moxon rectangle is about 1/3 the way from the bottom of the operating passband to achieve good values of front-to-back ratio and 50-Ohm SWR at the band edges. The Moxon design shown is for a direct 50-Ohm connection (via the usual common-mode current suppressing choke or 1:1 balun).

Moxon Rectangle 20-Meter Performance
See text for dimensions.

Frequency MHz	Free-Space Gain dBi	Front-Back Ratio dB	Feedpoint Impedance R +/- jX Ohms	50-Ohm SWR
14.0	**6.46**	**18.11**	**38.1 - j11.7**	**1.46**
14.15	**6.13**	**28.42**	**48.5 - j 0.2**	**1.03**
14.35	**5.73**	**18.09**	**60.6 + j11.6**	**1.33**

In general, the Moxon and the inverted-U Yagi achieve the same gain levels and have similar SWR curves. Where the Moxon shows the greatest performance edge is in the front-to-back ratio, averaging a 10-dB improvement across the 20-meter band. **Fig. 10** graphs the gain and the front-to-back curves, including both 180-degree and worst-case values. (The worst-case front-to-back ratio is called the front-to-sidelobe ration on the graph.) Note that the two curves are nearly the same. As in all 2-element parasitic beams using a driver and a reflector, the gain decreases nearly linearly across the operating passband. Fatter elements would yield a flatter gain curve with a slower rate of change, while thinner elements will show a steeper curve.

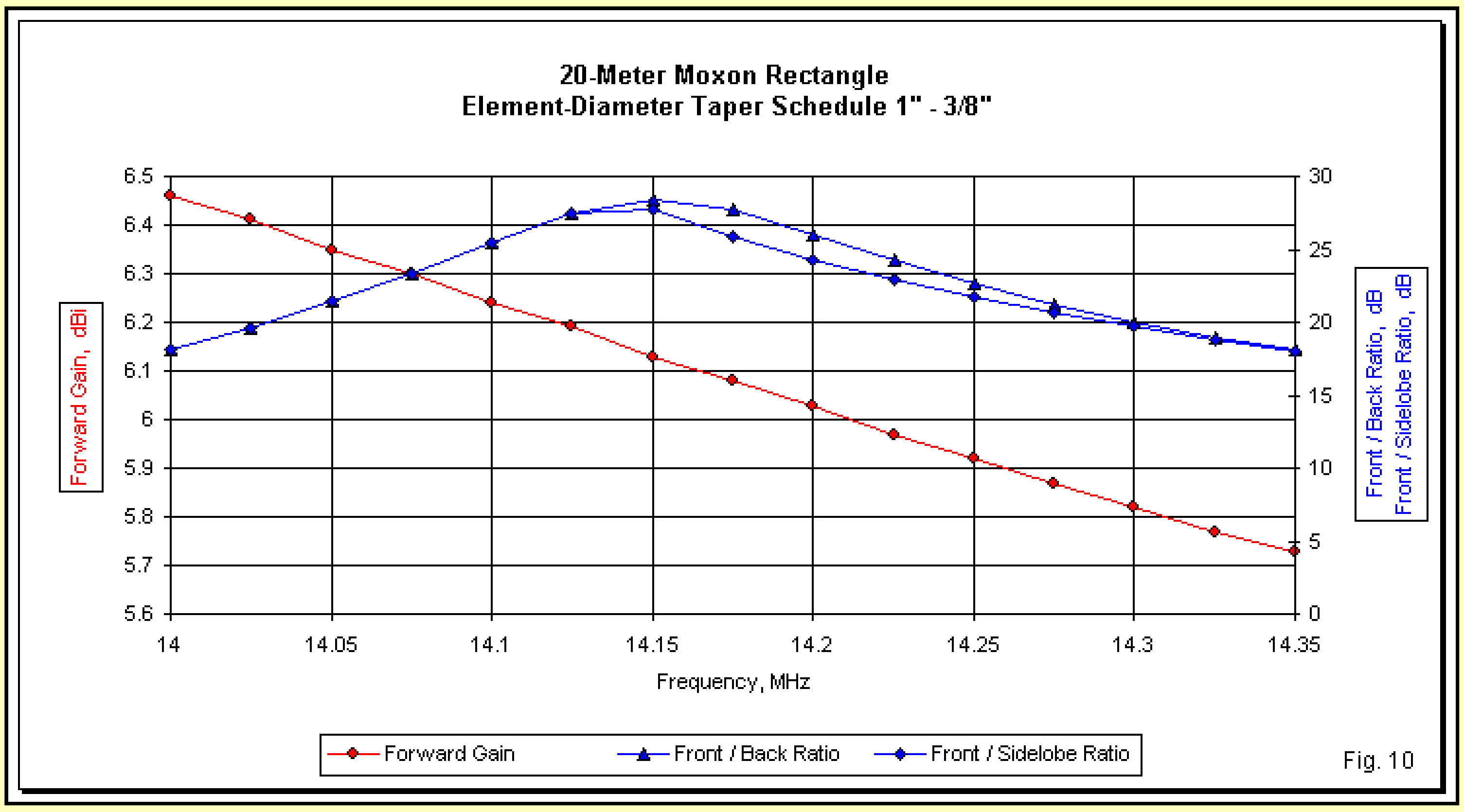

Fig. 10

Fig. 11 shows the progression of feedpoint resistance and reactance across the passband. Both curves change values at about the same rate, allowing for easy coverage of the 20-meter band. The 50-Ohm SWR never exceed 1.46:1, and the curve can under go further refinement during field adjustments. Like the gain curve, the SWR curve is flatter with fatter elements, although--of course, changing the element diameter schedule would require re-design of the array.

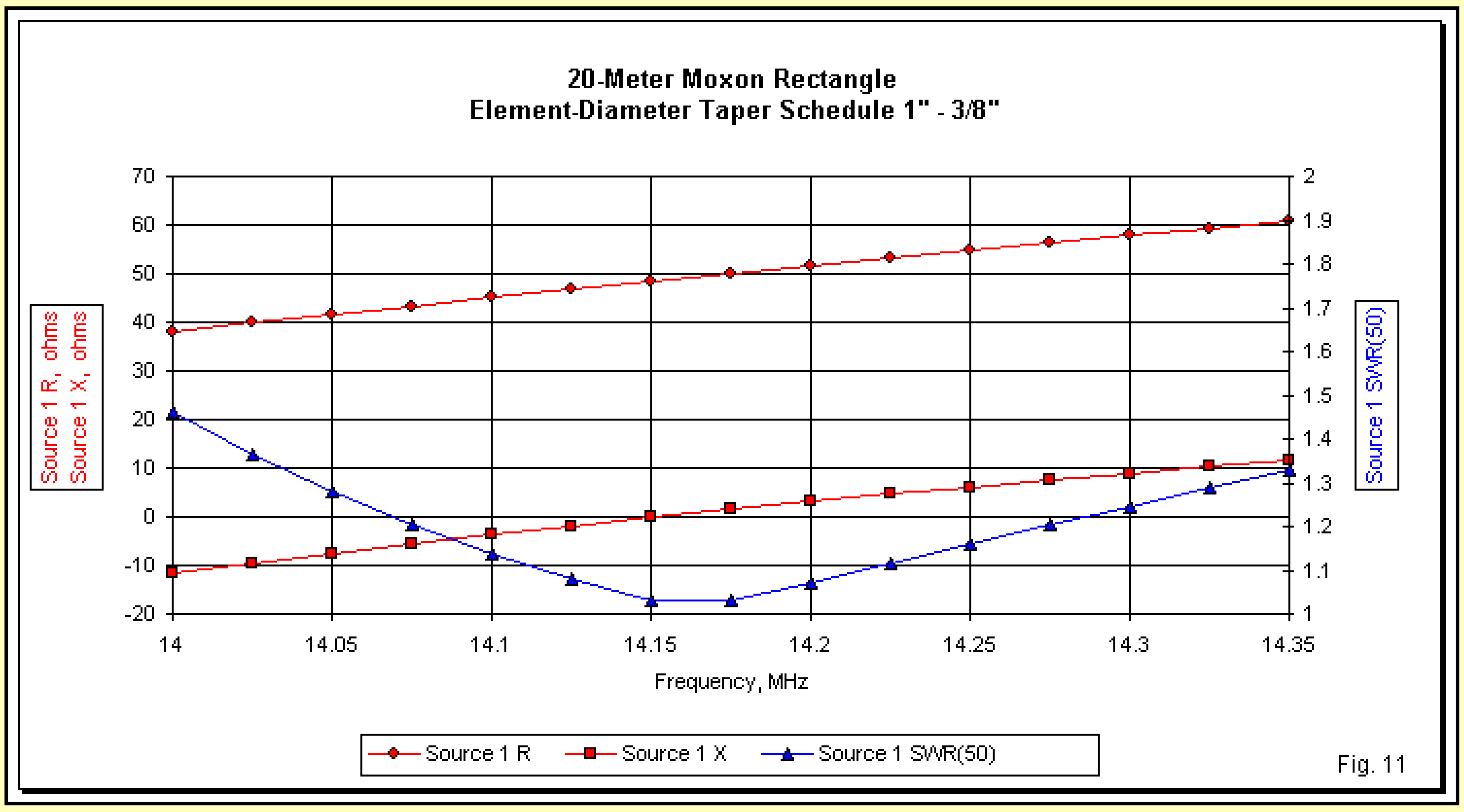

Fig. 11

The evolution of the free-space E-plane (azimuth) patterns appears in **Fig. 12**. The progression is normal for a Moxon rectangle. The side nulls do not appear at 90 degrees from the main forward heading, but between 100 and 120 degrees away from that heading. A uniform diameter Moxon array is capable of a maximum front-to-back ratio of 40 dB or more at the design frequency. The stepped-diameter version approaches 30 dB. However, the band-edge values (>18 dB) are similar to those of a comparable uniform diameter model. I did not try to refine the design frequency front-to-back ratio further, but instead held dimension changes in the design process to 0.5" for easier construction.

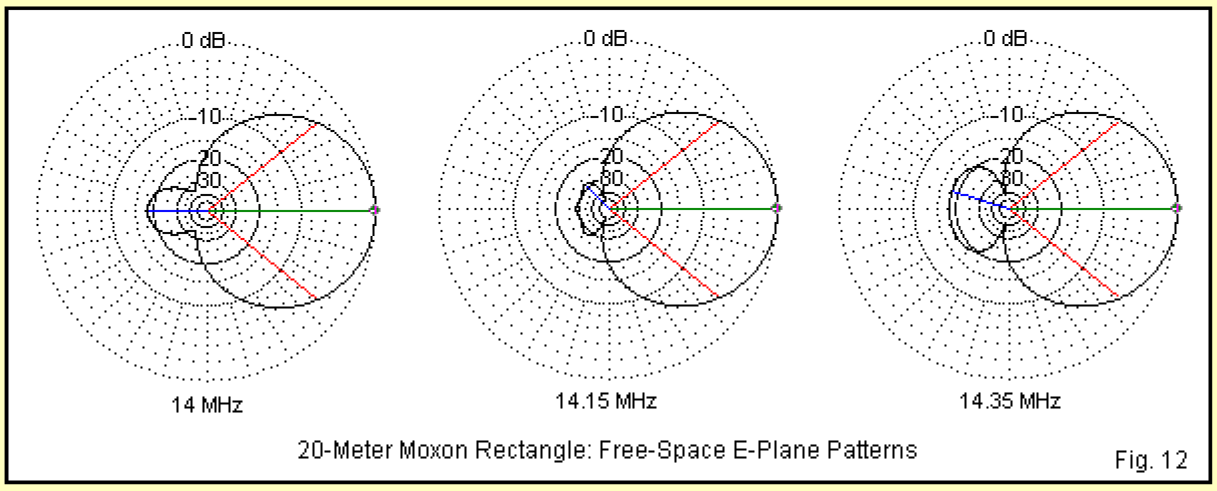

14 MHz

14.15 MHz

14.35 MHz

20-Meter Moxon Rectangle: Free-Space E-Plane Patterns

Fig. 12

Because the Moxon rectangle is flat and has a smaller horizontal footprint overall than the inverted-U Yagi, it may be in principle a better route to obtaining 2-element directional performance on 20 meters. As well, the increased front-to-back ratio may aid operation, especially reception. As a result, it is a useful alternative as we expand our thinking and escape the narrow focus the comes with trying to perfect a single design.

A Few Construction Notes

The Moxon rectangle is not the only alternative to the inverted-U Yagi for obtaining a directional beam with 2-element Yagi performance, but with a considerable saving in overall array size. However, it suffices to show the advantages of stepping outside a commitment to a single design and to considering alternatives for the achievement of a complex set of design and operating goals. In this instance, our goals included shrinking the overall size of a normal 20-meter Yagi, but retaining as much of the performance as possible. In addition, we set up an element taper schedule that better suited a long-term installation.

Both the inverted-U and the Moxon rectangle use a direct 50-Ohm feedpoint, which calls for a split driver to make connections at the element center. At HF, the size of the gap is generally not critical, although the actual gap is in principle simply the distance between the two conductors of the feedline cable. The leads from the cable or from the cable connector are part of the driven element. The element dimensions from end-to-end do not change, so we subtract half the gap size from each half-element in the driver.

Fig. 13

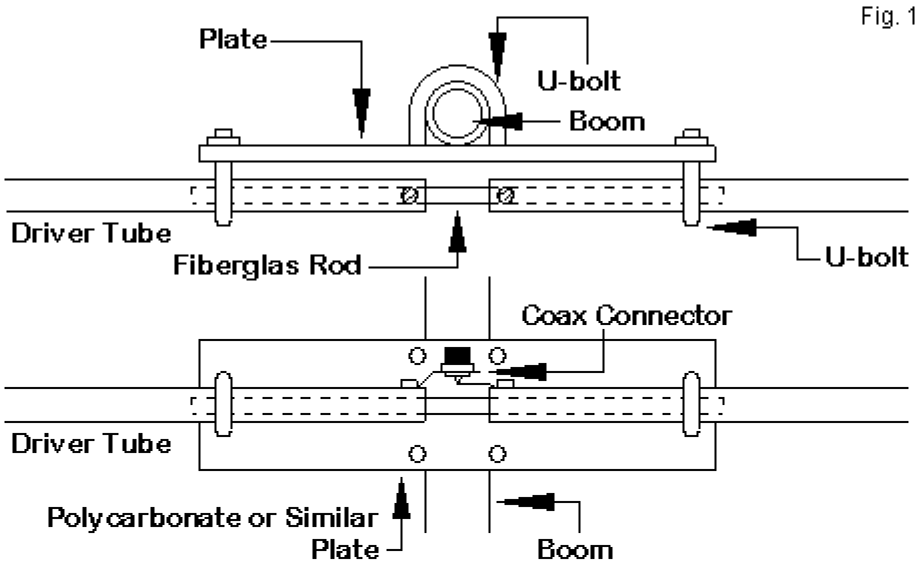

Driver Feedpoint and Element-to-Boom Assembly

Modeled designs also presume that all elements are well insulated and isolated from any conductive boom that might provide physical support. A 10' section of 1.25" outside diameter aluminum tubing is probably the most common boom material. Although the assembly is fairly light, a 1/8" wall tube or nested sections of 1.25" and 1.125" tubing is wise to support the wind-induced twisting loads on the entire assembly. **Fig. 13** shows one method (out of several) for constructing the feedpoint. A polycarbonate or similar plate provides the element isolation and supports the boom U-bolts. If we insert a non-conductive tube into the ends of each element half, we assure element alignment with only 2 U-bolts and also establish an anchor point for the gap and the feedpoint connections. If we also run the inner tube to the gap, then it also provides support that will keep the aluminum elements from crushing as we tighten the U-bolts. The outside diameter of the gap-setting tube should just fit inside the center tube section of the element. For the doubled Moxon 1" element section and for the 7/8" inverted-U element section, the required size would by 3/4". All hardware is stainless steel to prevent corrosion and to avoid bimetallic electrolysis.

As shown in **Fig. 14**, we may treat the reflector of either beam design in a similar manner. In this case, we bring the ends of the tubes together to form a continuous element or we use a single piece of tube to form the center element section. The advantage of using a split section at the reflector center is that we may use an interior piece of aluminum tubing to form the physical and electrical junction of the 2 element halves. Alternatively, we may use a single outer tube at the reflector center and then run the next smaller size tube from each side to the center of the outer tube. Extending the inner tube to the center of the outer tube provides the same insurance against U-bolt crushing that we obtained from the non-conductive tube in the driver elements.

Fig. 14

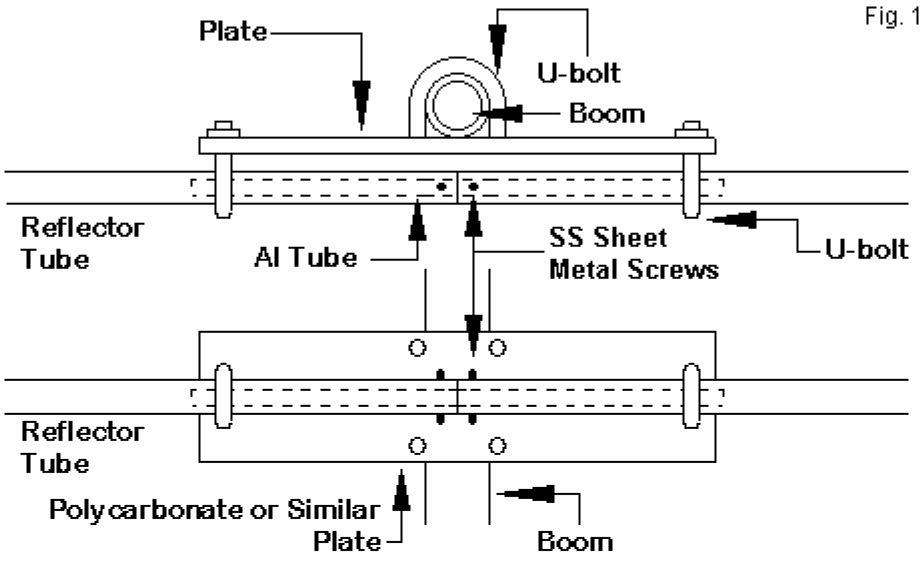

Reflector Element-to-Boom Assembly

The inverted-U element tips may use a simple eye-ring and bolt assembly for attachment. However, the Moxon tips require more thought, since we must meet several criteria. First, we must turn a corner. Second, we must maintain the gap size, even in the face of winds. Third, we must keep the tail ends aligned. For 3/8" diameter tubing, turning a corner is not difficult. Starting with a tube section that is longer than needed, we can bend one end in the same tubing bender used for small copper tubing. We can insert the short end into the 0.5" diameter section. The small curve at the corner will not alter the overall element length enough to cause any noticeable change of performance if we keep the total element length equal to the sum of all of the exposed portions of the sections. **Fig. 15** shows the general scheme.

Fig. 15

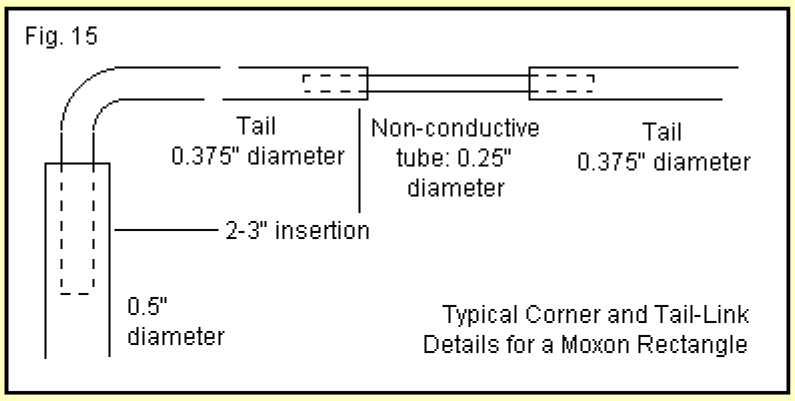

Typical Corner and Tail-Link Details for a Moxon Rectangle

The figure also shows a simple way to maintain the gap and to keep the ends aligned. We simply insert a 1/4" non-conductive tube or rod into the tail ends and fasten it with stainless steel sheet metal screws. The result is a physically closed rectangle. Because the Moxon rectangle in this configuration is subject to racking forces, we likely should reduce the wind load capacity of the elements by a small amount. The structure shown in **Fig. 9** should handle winds up to about 80 mph.

There are as many variations on physical construction as there are potential element-diameter taper schedules. Therefore, consider these notes as simply a starting point for your own ingenuity.

Conclusion

We have explored the use of an inverted-U Yagi as a means of obtaining a usable 2-element beam on 20 meters that is smaller than the normal 20-meter Yagi. To obtain nearly full performance, we had to begin with a 15-meter Yagi and add vertical tail sections. The longest element in the array was 24', with 90" vertical tails. To obtain a 50-Ohm feedpoint impedance, we required 160" between the 2 elements. We might use about 110" spacing if we are willing to add a matching network to the driver to raise the low impedance that results from closer spacing.

Since the size reduction that we achieve with the inverted-U Yagi on 20 meters results in adding a vertical dimension to the beam, we also looked at one alternative (among several that are possible) as a way of obtaining the same performance, having a 50-Ohm feedpoint, and further shrinking the antenna footprint. The Moxon rectangle is a good candidate, since it is a 2-dimensional array. With the element taper schedule used for the sample model, we ended up with a package that is 26.4' by 9.0', with no vertical dimension beyond the thickness of the elements and the mounting assembly. As well, we improved the front-to-back performance of the array.

The contrast of the two arrays shows us two significant facets of design work. First, a tight focus is required to bring an array to the point of maximizing its performance within the design criteria. Second, once we reach maximum performance, we need to widen our view to consider alternative approaches to reach the same goal and possibly to reach higher standards. The inverted-U dipole proved to be a useful field antenna. Within limits, it can also serve as a 2-element Yagi. However, when we take the design out of the field and plan for its use in a more permanent installation, it begins to show some of its limitations. We might easily have overlooked those limitations had we not examined a potential alternative design. The contrast strongly suggests that the inverted-U serves best as a simple dipole with changeable ends. Even as a Yagi, its best place may be in the field. For durable installations, there are better designs available.

Go to Amateur Radio Page